CTOUCH® Smart innovation!

Laser air+ 86 inch (UHD)

Leddura

Lexinus

Mensa

Laser air+ Series

When function matters.

The CTOUCH Laser air+ is a masterpiece when it comes to craftsmanship, technology and making touch accessible to the world. Integrating innovations like uWand, Beacon receivers and JBL sound, opening a complete new and unique experience in touch.

- 32 point Surface Light Wave™ - use 32 fingers at the same time
- COS™ - CTOUCH Android operating system
- CTOUCH app store - get instant access to high rated apps
- Built in Wi-Fi router
- CTOUCH Easy air PC module ready for flexible and heavy duty power
- Versatile annotation app - annotate over any software
- Best service & support - 7 years!
- JBL 80 watts speakers - designed, tuned and built by HARMAN
- uWand interactive gesture remote - touch your display at 5 meters distance
- Low power consumption

CTOUCH® Smart innovation!

Laser air+ 86 inch (UHD)

Make every experience great!

The CTOUCH Laser air+ is a masterpiece when it comes to craftsmanship, technology and making touch accessible to the world. Integrating innovations like uWand and Beacon receivers, opening a complete new and unique experience in a touch world.
The technology embedded in the uWand interactive gesture remote giving users fluid and accurate direct control, turning into an intuitive hybrid controller.
Joining forces with partners like JBL®, integrating sound designed, tuned and built by Harman, providing unprecedented audio.
Take meetings into a new dimension. Experience the JBL Audio System, an amazing JBL designed speaker system for the CTOUCH Laser air+. The JBL Audio System lets you experience true JBL® high-quality sound for business and education presentations. You've never experienced high-output audio like this from a touchscreen display!

CTOUCH Home screen

Maximize the flexiblilty in apps and programs with Android 5.0 inside. Combined with the new unique CTOUCH Home screen, every app is within instant reach. Follow meetings with a custom time keeper or annotate over everything!
Flexible to adjust to your needs.

Providing extra arm length with uWand

With the uWand gesture remote you are able to execute touch gestures. Only now you have the freedom of moving away from the screen and interact more with your audience!
This all comes plug and play out of the box.

80 watts to power your presentation

CTOUCH Laser air+ displays include a JBL speaker system - you can expect great sound. The audio system offers 80 watts of amplification – enabling you to captivate your audience. Experience clear highs and mids, plus exceptional bass – the true JBL sound that you've come to love.

Up to 20 kHz frequency response

No matter where the Laser air+ is located, the JBL audio system will deliver the full range frequency response associated with its exceptional sound.

Easy direct accessible connections

2 USB inputs on the screen, provide access to instant presenting, adding or sharing documents. The top USB connection on top back side provides a direct webcam USB connection enabling to video conference instantly.

Multiple touch inputs- less hassle

One of the + advantages of the CTOUCH Laser air+ displays, is the freedom to connect multiple devices without reconnecting the touch cable. CTOUCH includes 4 touch connectors.
1 automatic switch for the PC module, 1 for the Android and 2 automatic switchers for external devices. No hassle with with touch cables or switches- easy as that!

Smart energy saving

The ambient light sensor automatically adjusts the displays brightness to the most convenient eye sight.
The backlight mute function provides a digital curtain to manage the focus of the audiences and create extra attention on the display when needed. You even don't have to close programs, by a simple tap you're back in business.
Now that's energy & money saving with the Laser air+!

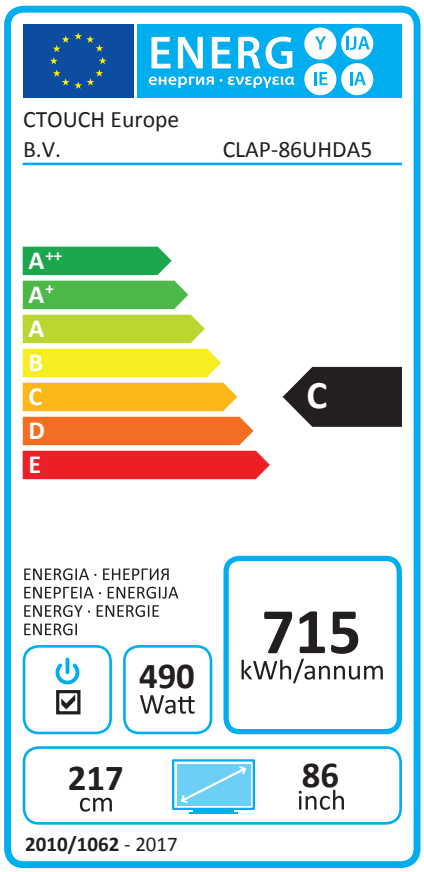

CTOUCHimPD170222

Laser air+ 86 inch (UHD)

Product number

- 32 Point touch - black bezel: 10051793

Touch system

- Touch system: Active IR
- Touch points: 32 points
- Touch tool: Hand or other solid (soft tip) object
- Accuracy: ± 3 mm
- Read speed: 120 responses per second
- Response time: 9 ms
- Effective screen size (mm): 1895,04 (W) x 1065,7 (H)
- Interface: USB 1.1 compatible (full speed) HID compliant, Plug & Play compatible, USB 2.0
- Supported OS: Windows, Mac and Android
- Touch driver: Not required for 20 points (under Windows and Android); 32 points need driver (under Windows)

Panel

- Diagonal size: 85,6"
- Panel resolution: 3840 x 2160
- Recommended resolution: 3840 x 2160
- Brightness (Nits): 350 cd/m^2
- Contrast ratio: 1200 : 1
- Response time: 8 ms
- Aspect ratio: 16 : 9
- Display colour: 1.07 Billion colours (10-bit)
- Pixel pitch (mm): 0.4935 (W) × 0.4935 (H)
- Back light unit: Direct LED
- Anti reflective glass: Yes

Connectivity

- Video input (digital): HDMI x 2, USB 2.0 x 4, USB 3.0 x 2, DP x 1
- Video input (analogue): VGA IN x 3, VGA OUT x 1, AV IN (mini jack) x 1
- Audio input: x 3
- Audio output: x 1 (SPDIF)
- USB (for touch): x 2
- uWAND sensor beacon: Yes
- Network controllable input: RS232C, LAN IN

Features / Convenience

VIDEO

- PSM: Warm / Cool / Normal
- Picture mode: Dynamic / Standard / Soft / User
- Freeze function: Yes
- Backlight mute function: Yes
- Ambient light sensor (auto adjust backlight): Yes

SOUND - Designed, tuned and built by HARMAN

- Transducers: 2 Stereo JBL 3-Way Speakers (tweeter, mid-range and woofer)
- Amplifier power: 80 watts
- frequency range: 60Hz - 20kHz

FUNCTION

- Touch OSD: Via home button: Yes
- Languages: English
- Internal CTOUCH Easy air PC module slot: Yes
- uWAND interactive gesture remote: Yes
- HDCP compliance:: 2.2

Dimensions and Quality approvals

- Dimensions (mm): 1993.6 (W) x 1177.6 (H) x 112 (D)
- Product weight: 112 kg
- VESA mount (mm): 600 (W) x 400 (H)
- Green approvals: RoHS compliant
- Regulatory approvals: CE
- ISO standard: ISO9001 and ISO14001
- Thickness of safety glass: 4 mm

Total cost of ownership

- Service & warranty: 7 years warranty
- Power consumption nominal: 490 W
- Power consumption sleep mode: 0.5 W

Product accessories- Included

- Accessoires pack: Power cable, USB cable, HDMI cable, remote, touch pen, Quick start guide
- Annotation: Yes, annotate over any software application
- Gesture recognition: Yes, refer to CTOUCH manual
- uWAND interactive gesture remote: Yes, special remote included

Android

- System version: 5.0.1
- CPU: ARM Cortex A53 1.5 GB (64 Bit 4 Core)
- GPU: Mali-450
- RAM: 2 GB
- ROM: 16 GB

Extras

CONNECTIVITY

- Easy air PC Module i3: 10052021
- Easy air PC Module i5: 10052022
- Easy air PC Module i7: 10052023

SUPPORT & TRAINING

- Support and training programs: On request

SOFTWARE

- On the CTOUCH software portal: On request

MOUNTING

- CTOUCH Wallom wall lift - electric: 10080201
- CTOUCH WMT mobile lift - electric: 10080212
- CTOUCH WMT tilt table - electric: N.A.

Logistics information

- Box size (mm): 2114 (B) x 1456 (H) x 290 (D)
- Gross weight: 128 kg
- EAN no.: 8718868301994

CTOUCHimPD170222

Viewing the control panel

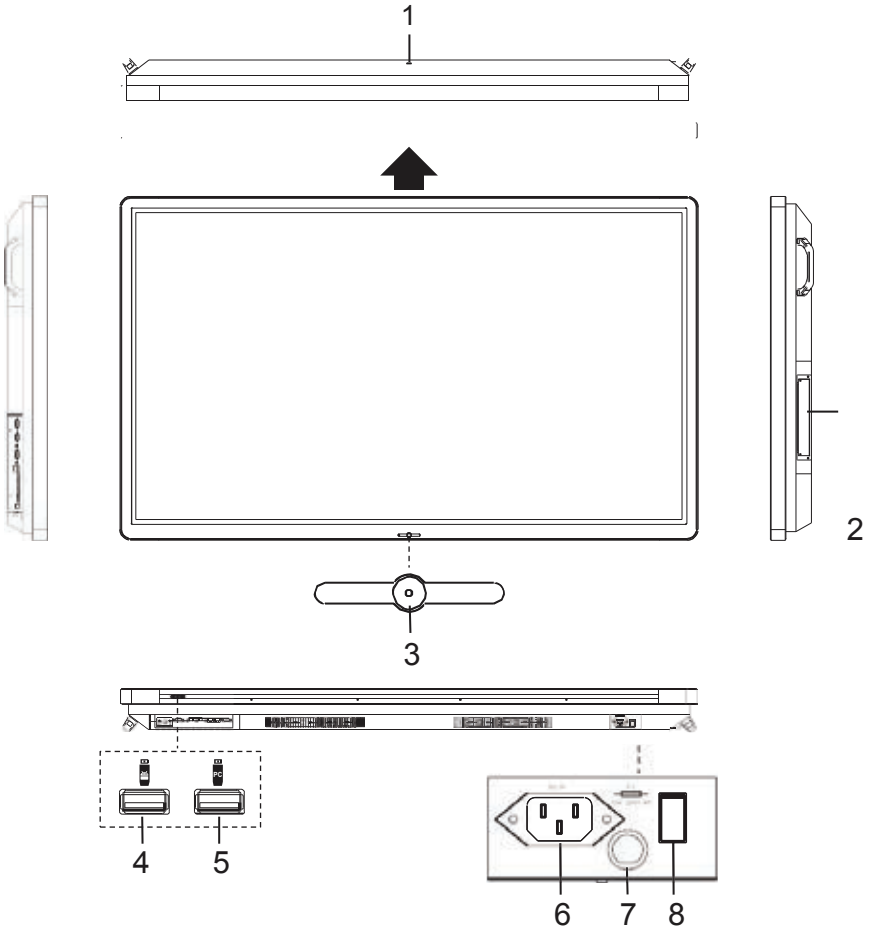

1	USB(2.0)(for camera)	This port is connected to PC when current source is PC (internal Easy air PC), but is changed to Android if current source is Android Launcher. **Note:** Please open the dust cover before being used.
2	Internal PC module slot	Insert the CTOUCH Easy air PC module (Optional).
3	Power LED Remote control sensor Power	Red: In standby mode. White: In power on mode. Aim the remote control towards this spot on the CTOUCH interactive display. Switch the CTOUCH interactive display power on or off. **Note:** When the CTOUCH interactive display is turn on, press to display the navigation bar, if this button is pressed about two seconds to turn off the CTOUCH and put the display in standby mode.
4		USB port for CTOUCH Android Launcher.
5	PC	USB for Easy air PC module. **Note:** If no Easy air PC, the USB port has no function.
6	AC IN	Plug the AC cord into this jack .(AC 100-240V 50/60Hz).
7	Fuse	12A 250V.
8	Power Switch	Push to (I) to connect the power, push to (O) to cut off the power.

Viewing the connection panel

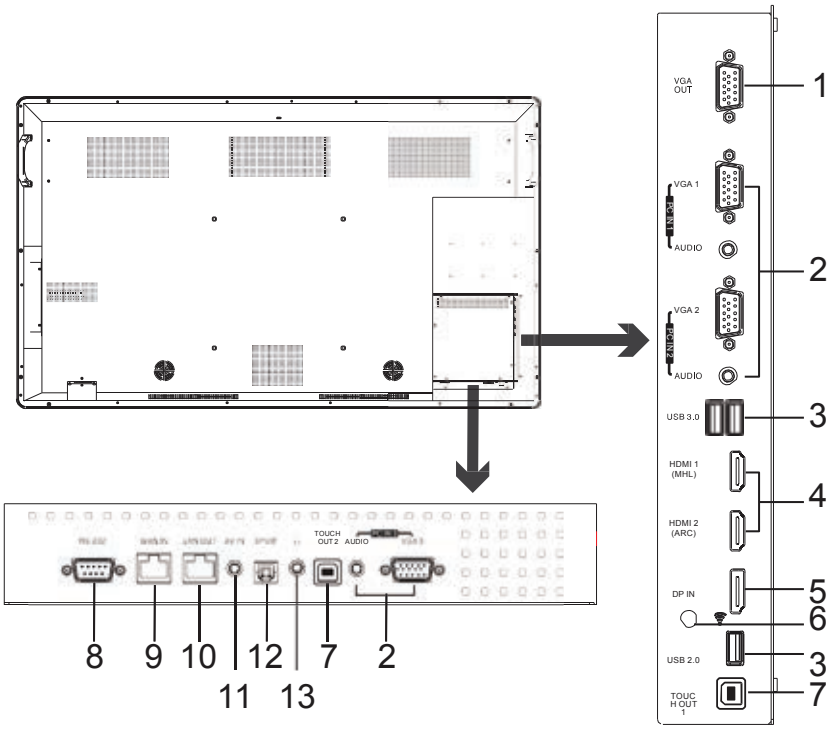

1	VGA OUT	Output for the currently selected VGA IN 1/2/3 signal.
2	VGA IN 1/2/3	Connect the video/audio for a computer to these ports.
3	USB2.0/3.0	Connect USB devices to these ports.
4	HDMI1/2 IN	HDMI1(MHL): Connect an MHL - enabled device such as a cell phone to this jack to view the external device's screen on your screen. HDMI2(ARC): Connect an ARC-enabled home theater receiver to this jack.
5	DP (Display Port) Input	Connect an external device to DP out jack.
6	(Antenna)	Wi-Fi antenna.
7	TOUCH OUT1/2	Output the touch for external devices connected to HDMIx, DP or VGAx port which support touch system. **Note:** By default TOUCH OUT 2 has priority over TOUCH OUT 1, this can be altered in the menu.
8	RS232	For control and monitoring screen via RS232 protocol.
9	WAN IN	The built-in router input port. Connect to the external network.
10	LAN OUT	The built-in router output port. Connection to another computer or other Internet enabled devices.
11	AV IN	Input port for composite video.
12	S/PDIF digital audio OUT	Connect an optical audio cable.
13		Connect a 3.5 mm Mini Jack. The CTOUCH interactive display is the current audio output.

CTOUCH® Smart innovation!

Laser air+ 86 inch (UHD)

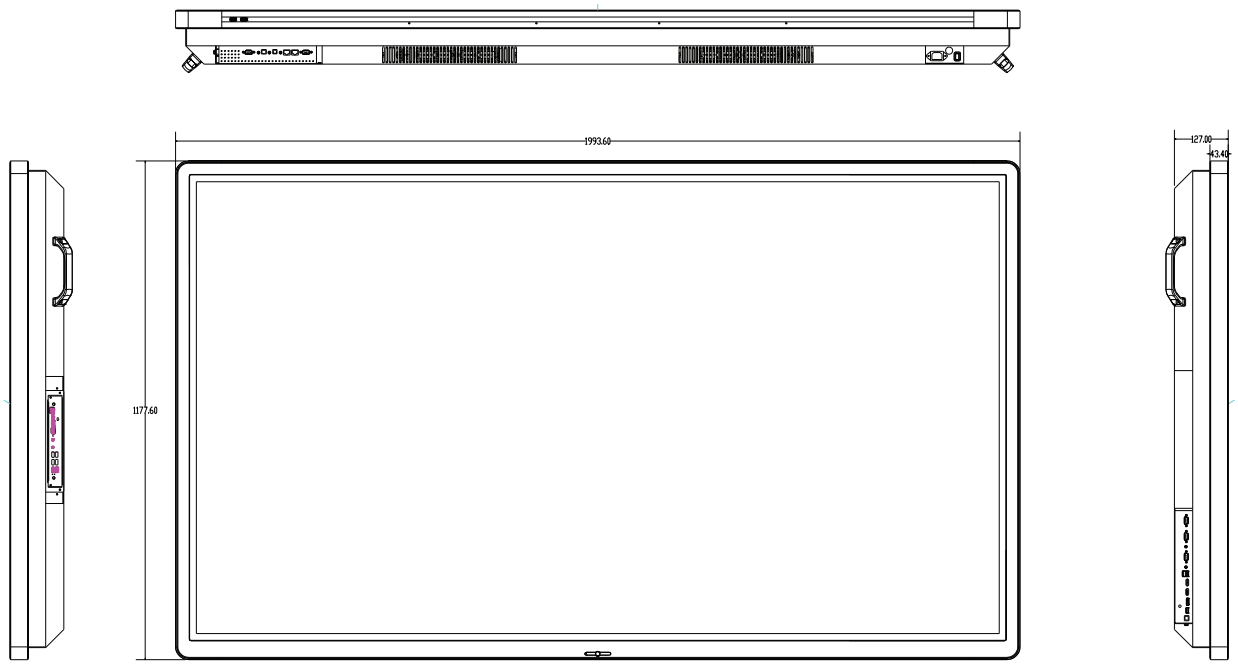

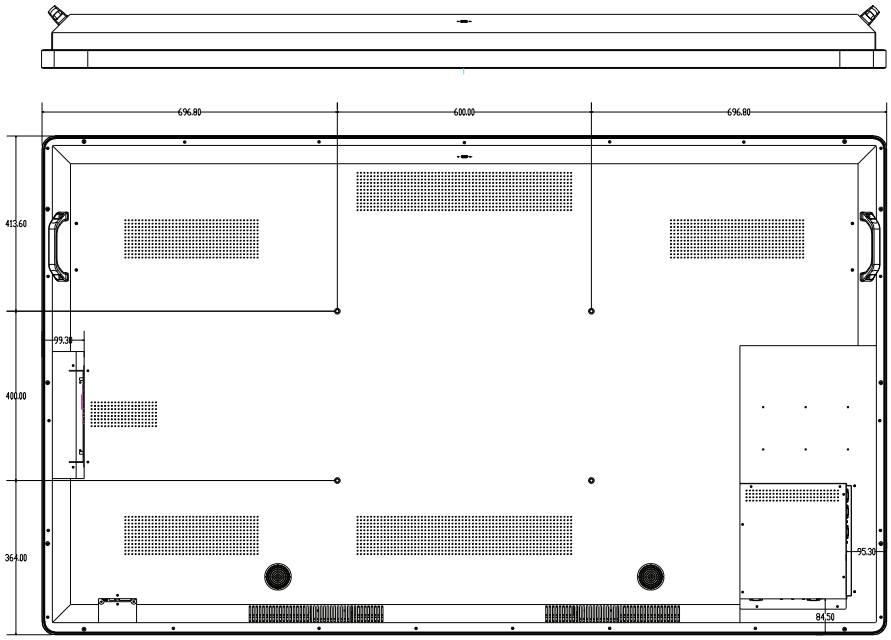

All rights reserved. CTOUCH products and services mentioned herein as well as their respective logos are trademarks or registered trademarks of CTOUCH Europe B.V.. All other product and service names mentioned are the trademarks of their respective owners.